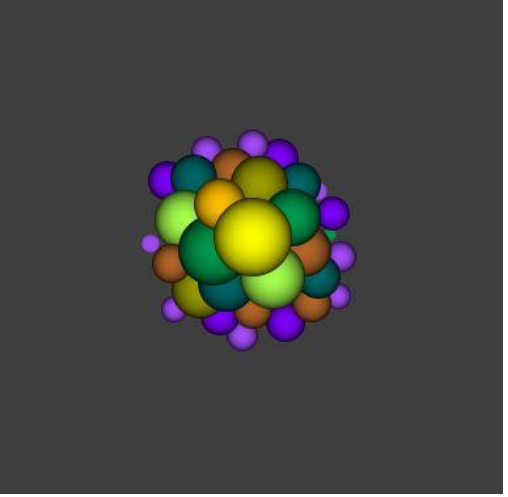

CS 440: Computer Graphics

Week 2

Lecture 4: Imaging

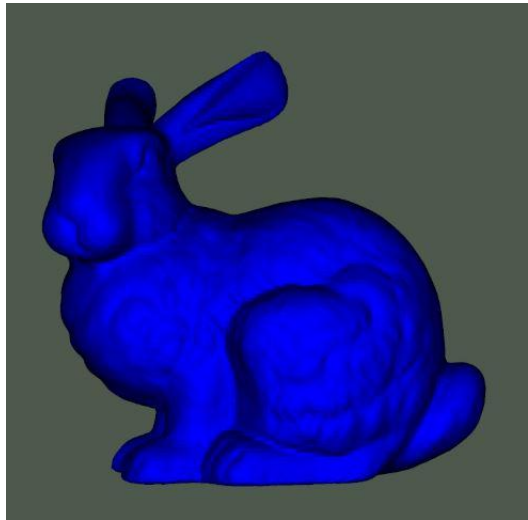

Acknowledgements: Cem Yuksel, University of Utah; Waqar Saleem, Habib University

Recap: Imaging

- Systems View
- Programmer's View
- Images and Pixels
- Image Formats
- Color
- Imaging System: Human Visual System

Recap: Framebuffer Depth

- "Per pixel" and "per channel" depth

Color system	Bits/pixel	Bits/channel
Black & White	1	1
RGB	24	8
RGBA	32	8
HDR10	30	10
RGB16	48	16

2^8 = 256 colors/channel
Approximately 2^24 ≈ 16.7 million total colors

8-bit deep framebuffer

Today: Imaging

- Color
- Image Formation
- Imaging System: Pinhole Camera
- Imaging System: Synthetic Camera Model

Color Cube

- RGB values in [0, 1]
- Similar to a coordinate system

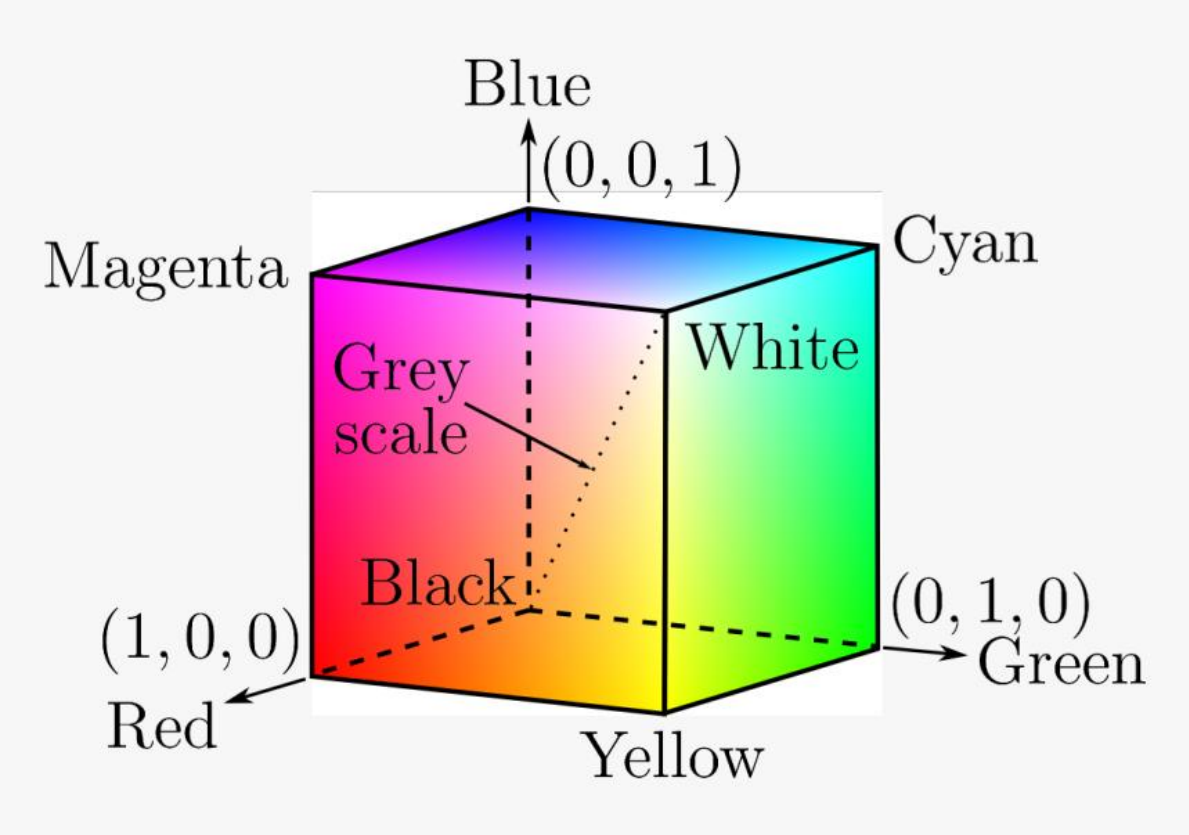

Color Gamut

- Device independent vs dependent colors
- Not all colors are physically reproducible by one system
- Color gamut: Set of colors that a particular device can output

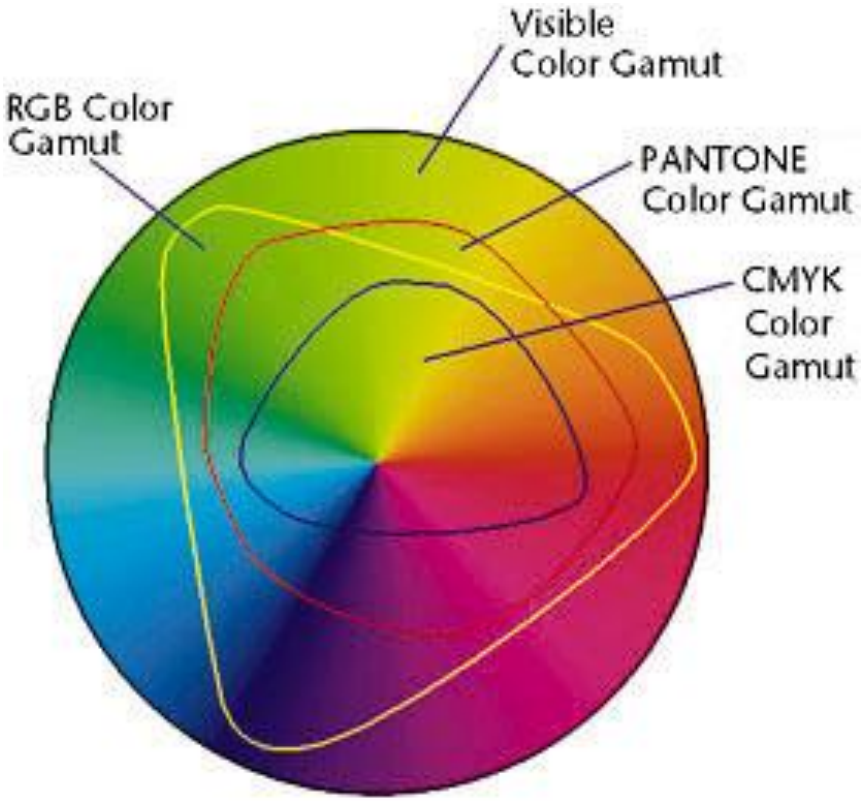

Image Formation: Object and Viewer

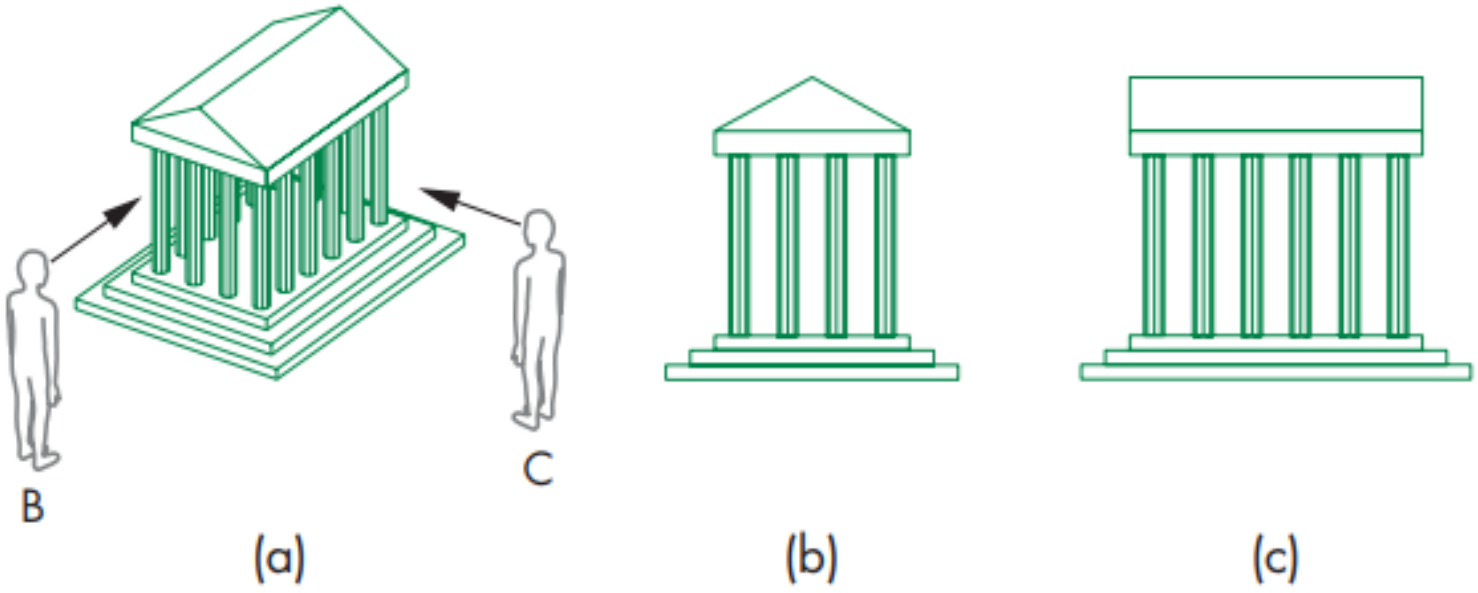

Image Formation: Light and Material

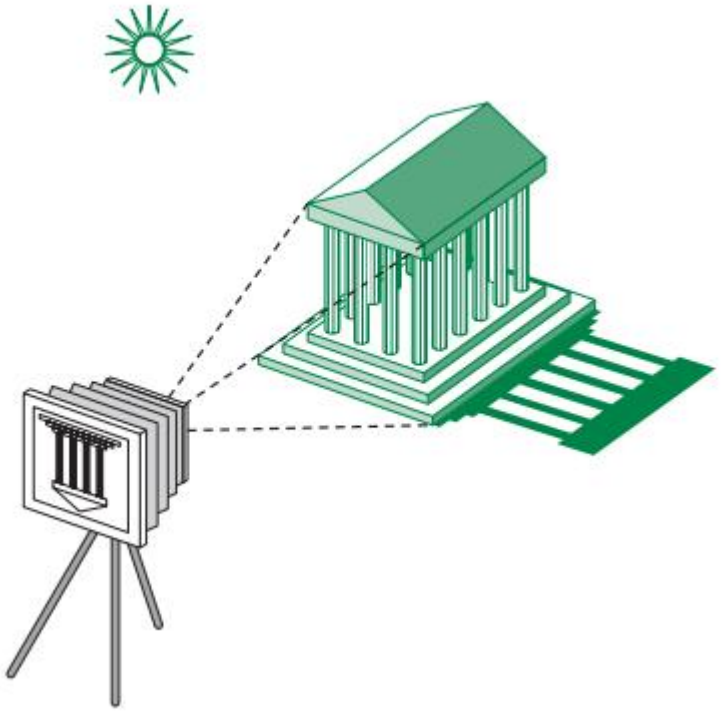

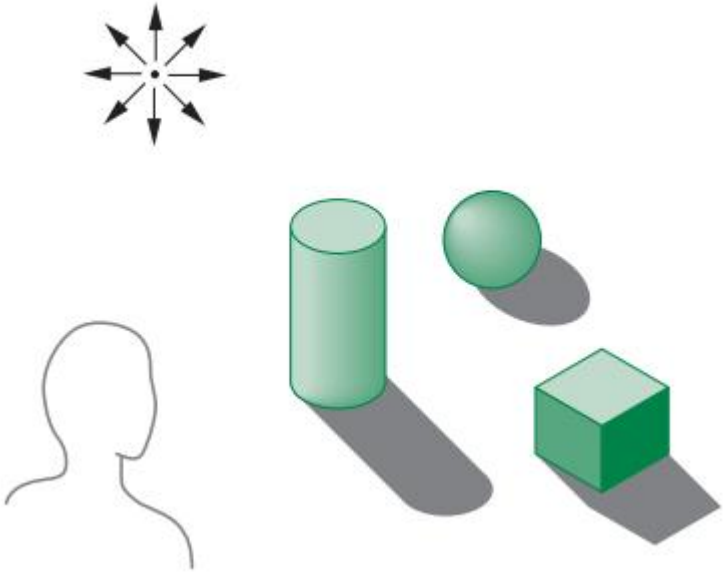

Image Formation: Light and Material

- Light rays travel infinitely in a particular direction
- They pass through camera lens and form on image
- Different interaction with object depending on object surface – different materials

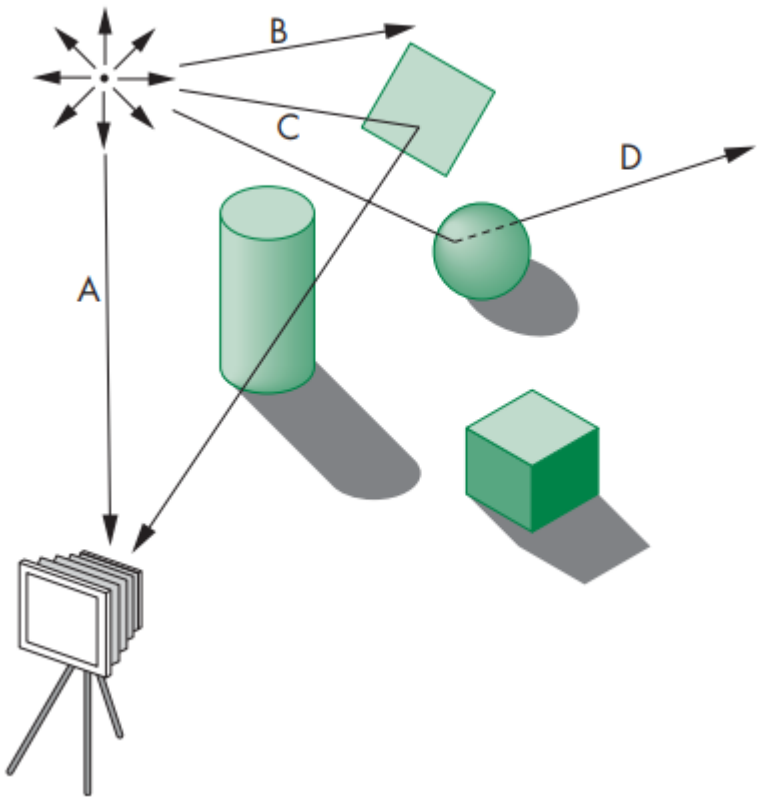

Imaging Systems: Pinhole Camera

- All light from the 3D scene goes through the pinhole
- A screen/sensor at the back of the box (opposite of pinhole) creates an inverted image
- A camera would “preserve” this image

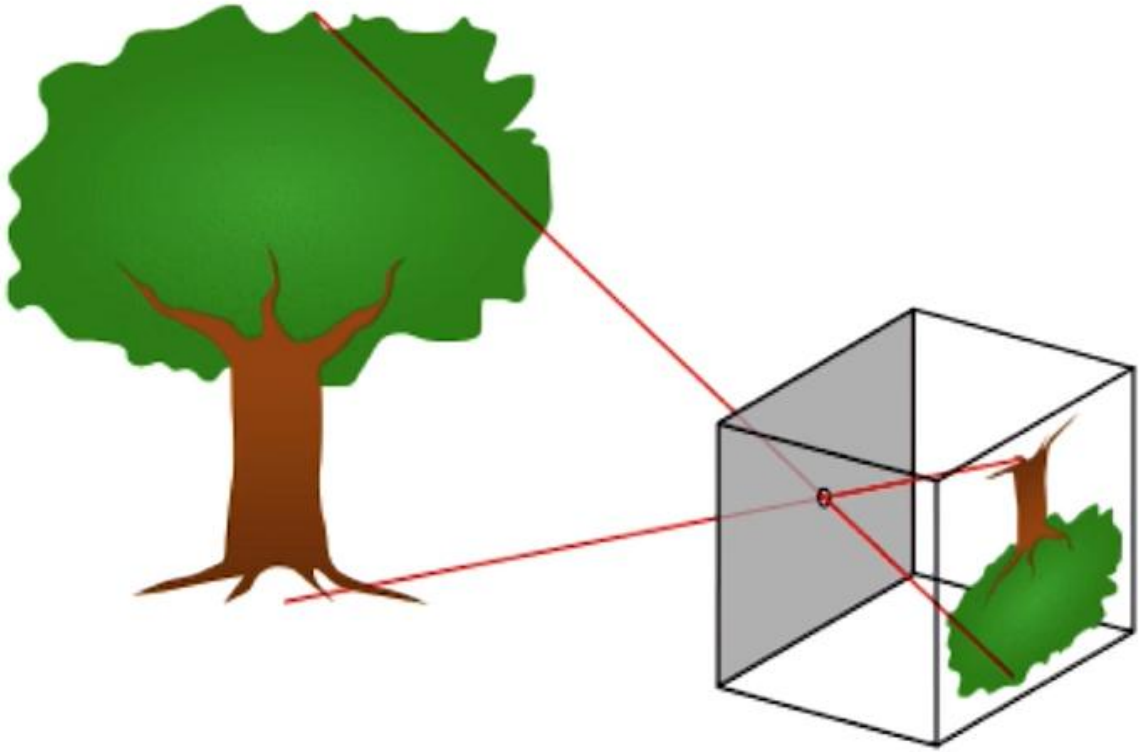

Imaging Systems: Pinhole Camera

- **How is the image formed at the back of the camera?**

- Object is placed at (x, y, z)

- Projection of point (x, y, z):

$$(x_p, y_p, z_p) = \left(-\frac{x}{z/d}, -\frac{y}{z/d}, -d\right)$$

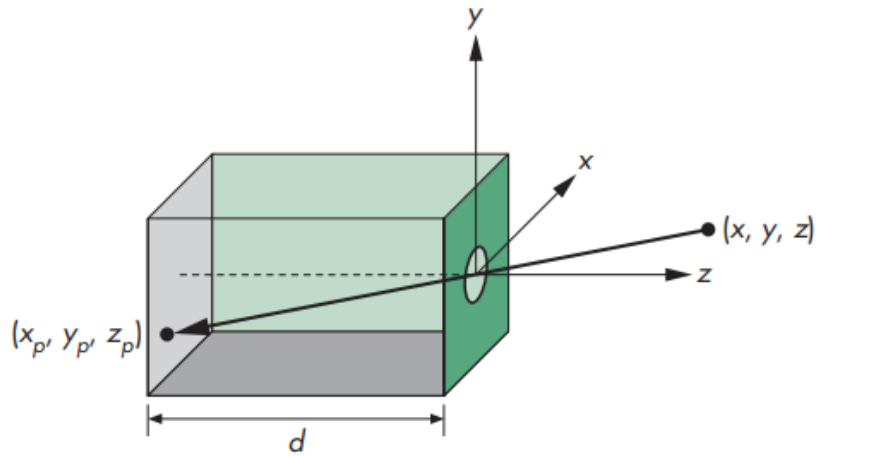

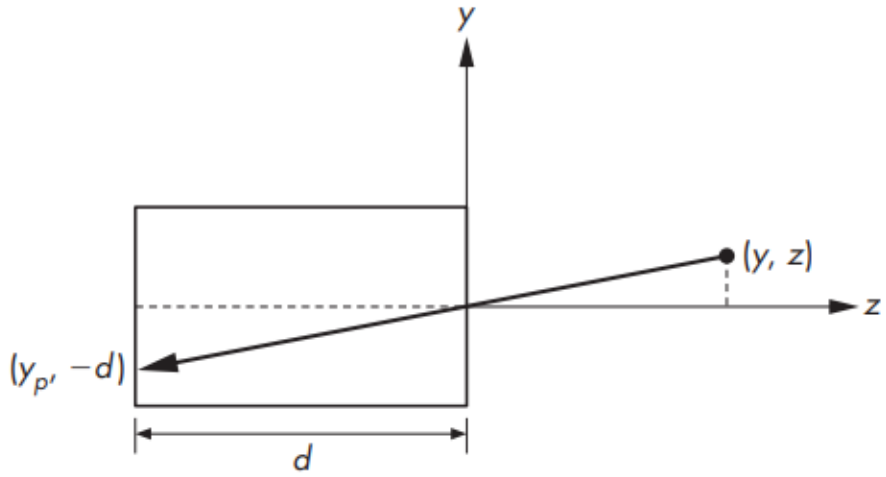

Side View

Imaging Systems: Pinhole Camera

Field of View

- Angle made by largest object that the camera can image on its film plane

- Angle of view is given by:

$$\theta = 2\tan^{-1}\frac{h}{2d}$$

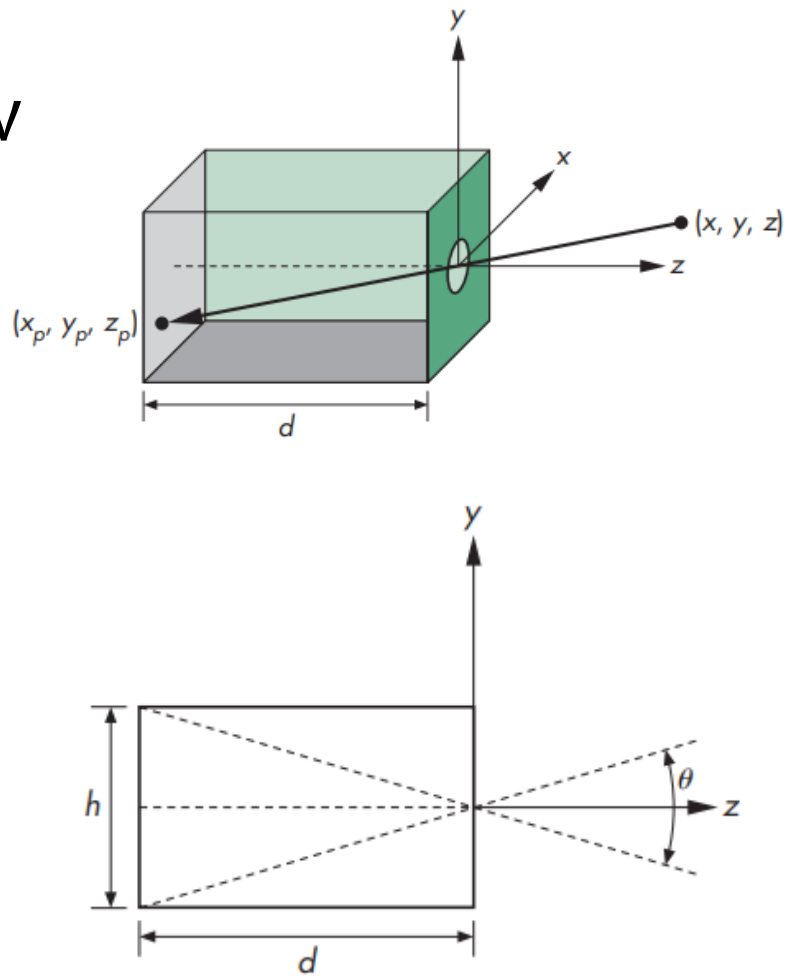

Camera Obscura

- https://youtu.be/gvzpu0Q9RTU?si=-686BuHfXKREoIsC

…I actually tried this

Depth of Field

- Ideally, pinhole photograph has:
  - No distortion
  - Infinite depth of field (everything is in focus)

- **Why are pinhole cameras not used now?**

Adapted from GT CS 6475: Computational Photography

Replacing Pinhole with a Lens
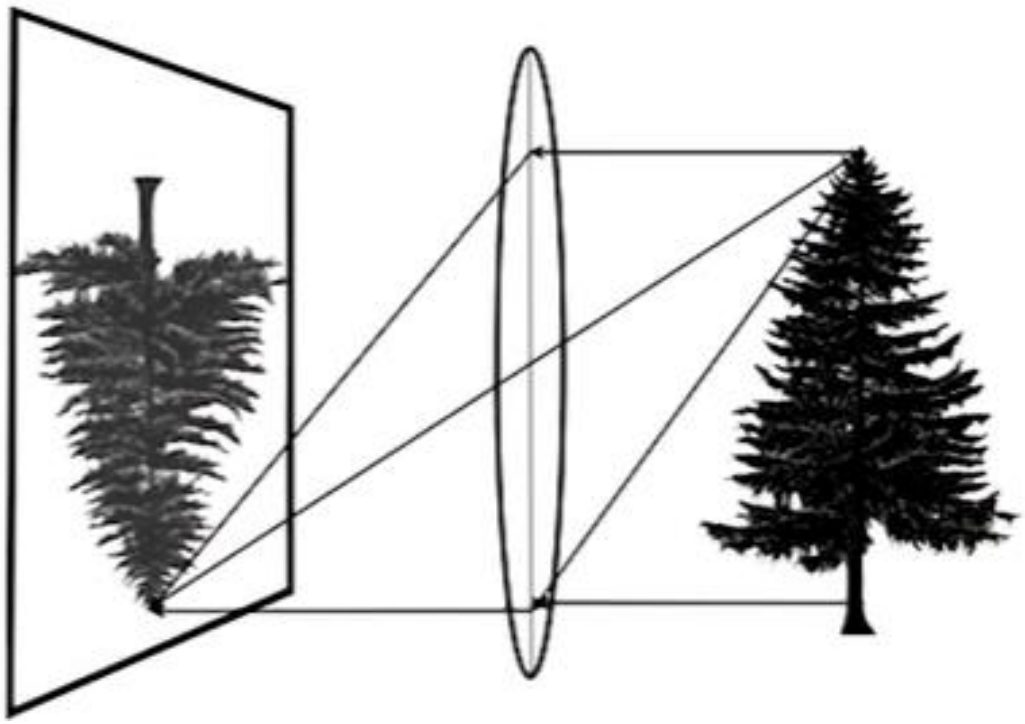
- Lens have a larger aperture, so more light is collected
- Light rays converge at a point (similar to pinhole)
- No infinite depth of field